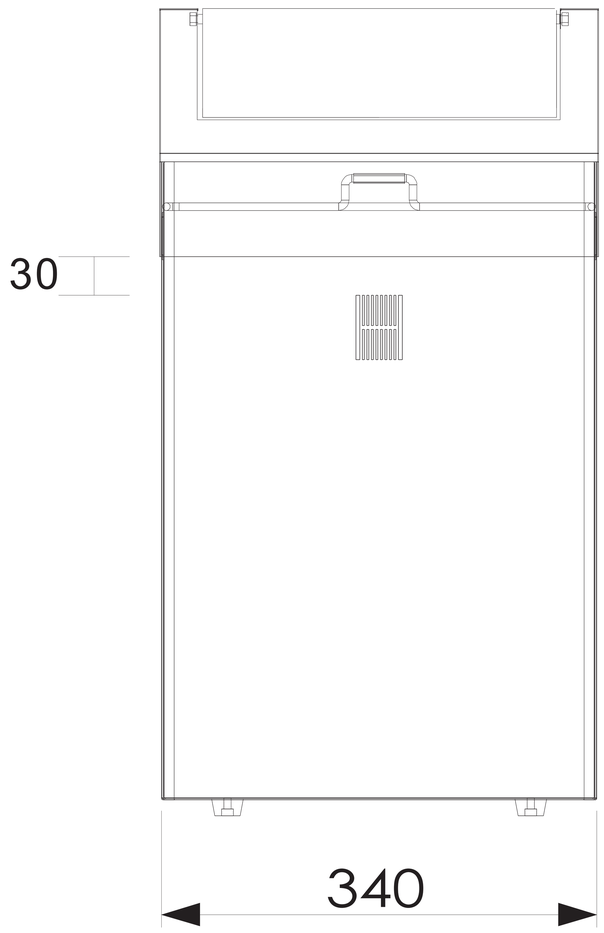

BACK VIEW

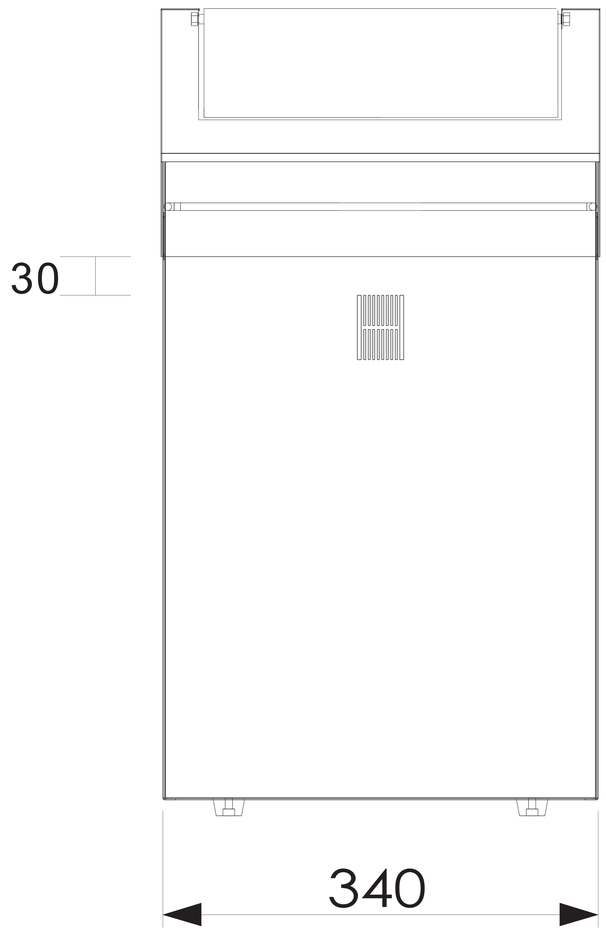

FRONT VIEW

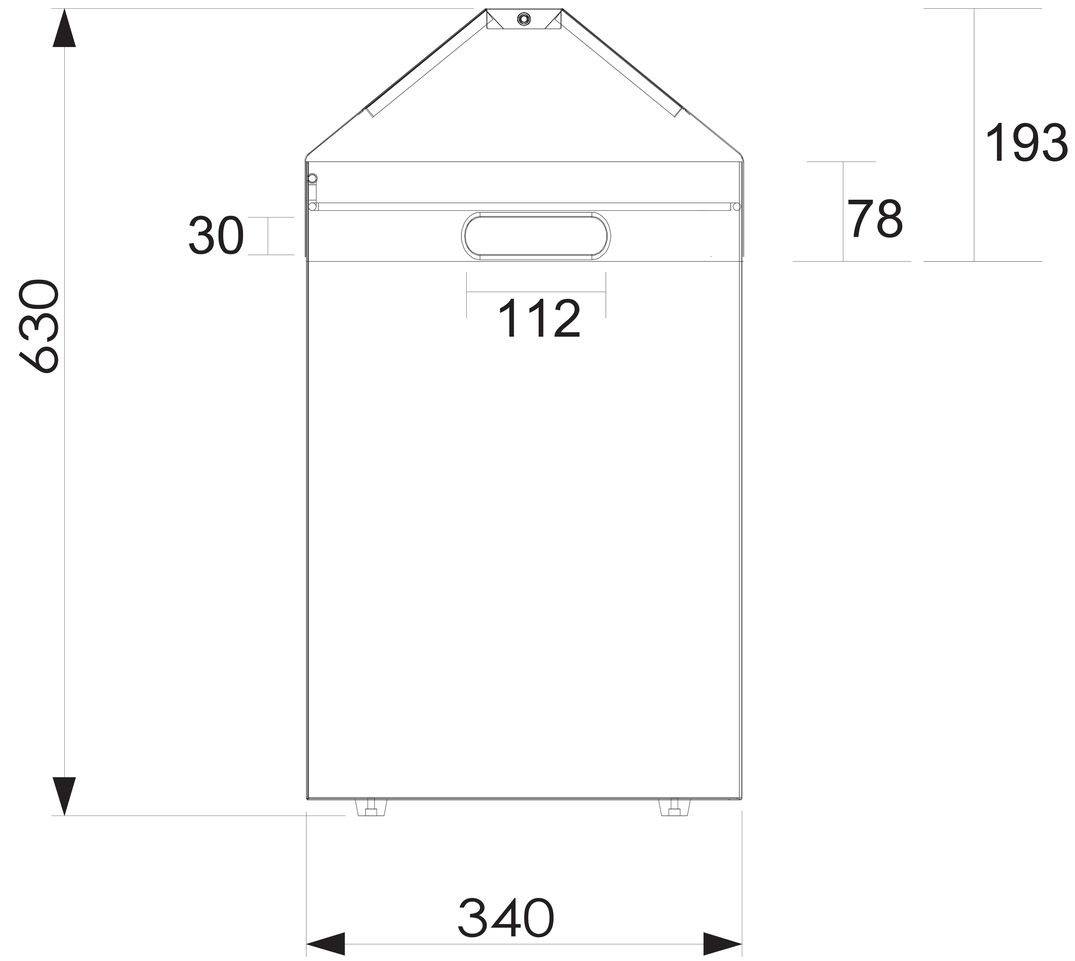

LEFT VIEW

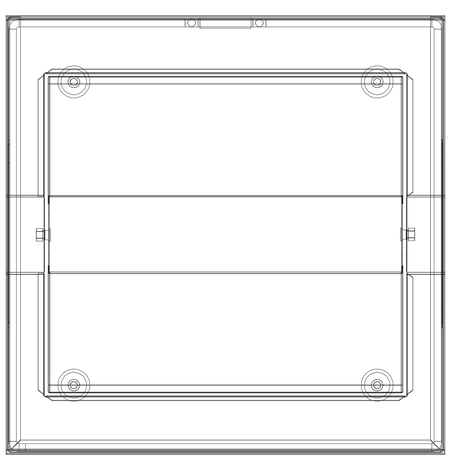

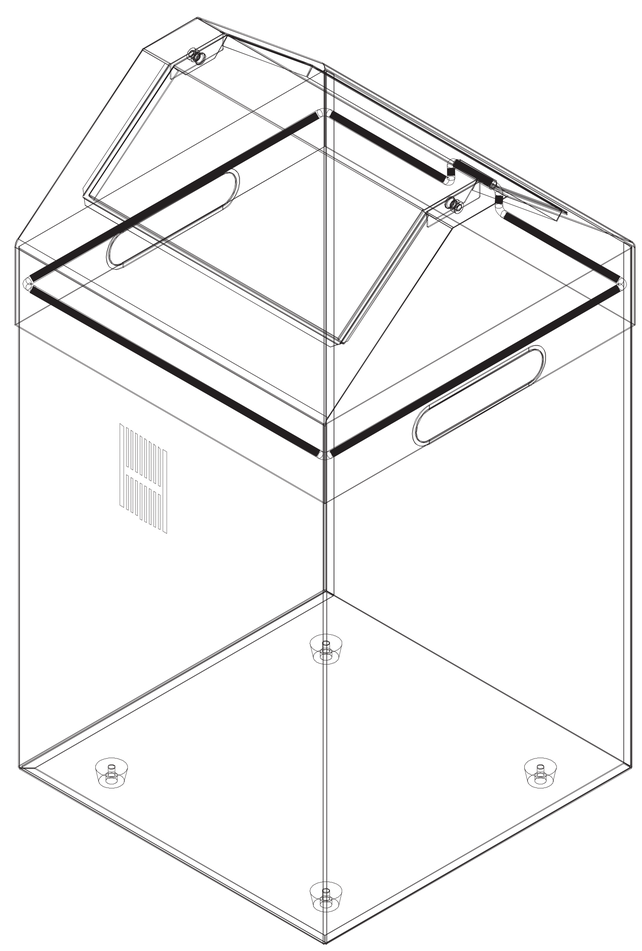

WASTE BIN WITH SWINGING DOOR					
NO.	888175				
MATERIAL	COVER: SUS304 T1.2 BASE SUS304 T1.2				